WORLD BEST HYDRAULIC POWER UNITS

Hydraulic Motor
Hydraulic Pump
Hydraulic Valve
Hydraulic Accessory

HYDRAULIC

POWER UNITS

Hydro-Tek 2008

Hydraulic solution **Hydro-Tek®**

산업 패밀리 기업 지정서

기 업 명 : 하이드로텍(주)
대 표 자 : 유 성 필
사업자등록번호 : 135-81-30702

귀사를 산학연관 협력 활성화의 일환으로 추진중인 「산업 패밀리 클러스터 사업」에 참여하는 패밀리 기업으로 지정합니다.

(지정기간 : '07.04.02 ~ '10.04.01)

2007년 4월 2일

경기중소기업종합지원센터 대표이사 이 덕 환

아주대학교 총장 서 문 호

Global Inspiration 세계속의 경기도

제061624022-1-00618 호 중소기업청

벤처기업확인서

업 체 명 : 하이드로텍(주)
대 표 자 : 유 성 필
소 재 지 : 경기도 화성시 마도면 송정리 107-12
확인유형 : 신기술기업
평가기관 : 기술신용보증기금
유효기간 : 2006. 4. 20 ~ 2007. 12. 31

위 업체는 벤처기업육성에관한특별조치법 제25조의 규정에 위하여 벤처기업임을 확인합니다.

2006년 4월 20일

경기지방중소기업청장

제 20062428 호

기업부설연구소인정서

1.연 구 소 명 : 하이드로텍(주) 기술연구소
[소속기업명 :하이드로텍(주)]
2.소 재 지 : 경기도 화성시 마도면 송정리 107-12
3.신고연월일 : 2006년 7월 4일

기술개발촉진법 제16조 및 동법 시행령 제15조 제1항의 규정에 의하여 위와 같이 기업부설연구소로 인정합니다.

2006년 8월 4일

산업자원부 한국산업기술진흥협회장

제 2006-406 호

안 전 인 증 서

하이드로텍(주)
경기도 화성시 마도면 송정리 107-12

위 회사에서 제조하는 아래의 품목이 산업안전보건법 제34조의2에서 정한 안전보건기준에 적합하므로 안전인증서 사용을 인증합니다.

품 목

리프트 밸브

형식모델 / 인증번호	
형식모델	인증번호
LC	06A - 4170

인 증 기 준

- 기계기구 등의 안전인증규정(노동부 고시 제2003-15호)
- 기계기구 등에 관한 안전인증업무기준(KI-G-35-2003)
- 유압식스템의 안전표준(EN 983)

인 증 권 리

안전인증증표의 홍보광고, 확인심사 수검, 안정사항 신고 등 인증부분 외에 관수사항 없음

2006년 12월 21일

한국산업안전공단 이사장

제 2006-407 호

안 전 인 증 서

하이드로텍(주)
경기도 화성시 마도면 송정리 107-12

위 회사에서 제조하는 아래의 품목이 산업안전보건법 제34조의2에서 정한 안전보건기준에 적합하므로 안전인증서 사용을 인증합니다.

품 목

Power Pack

형식모델 / 인증번호			
형식모델	인증번호	형식모델	인증번호
DA08HL-MH	06A - 4171	T415MD-05	06A - 4175
D114LS-01	06A - 4172	T415MD-03	06A - 4176
D114LS-02	06A - 4173	T415MD-02	06A - 4177
D114LS-03	06A - 4174		

이하여백

인 증 기 준

- 기계기구 등의 안전인증규정(노동부 고시 제2003-15호)
- 기계기구 등에 관한 안전인증업무기준(KI-G-35-2003)
- 산업용기계장비의 전기장치등에 관한 기술기준(KOSHA CODE E-11-98)
- 유압식스템의 안전표준(EN 983)

인 증 권 리

안전인증증표의 홍보광고, 확인심사 수검, 안정사항 신고 등 인증부분 외에 관수사항 없음

2006년 12월 21일

한국산업안전공단 이사장

Certificate of Quality Approval Issue 2

DAS CERTIFICATION

QUALITY MANAGEMENT SYSTEM
Certificate of Approval

This is to certify that the quality management system of

HYDRO-TEK CO., LTD.

#107-12 Songjeong-ri, Mado-myeon, Hwasseong-si, Gyeonggi-do, Korea

Has been assessed and found to meet the requirements of :

ISO 9001:2000 / KS A 9001:2001

The certificate valid for the following scope of operation:

Design, Development, Manufacture and Servicing of Hydraulic Units . (Hydraulic Power Pack)
Nace/EA : IX, Machinery and equipment

Date of Certificate Issue: 04-February-2006
Certificate Valid until: 04-February-2009
Certificate Number: DKQ-6864

Authorized

Date 04-February-2006

DAS CERTIFICATION Ltd.
Company Number: 3304102
5 Bridgeport Close,
Lichfield,
Hampshire WS14 9EB
Tel: +44(0)1543 416 416 Fax: +44 (0) 2392 597880
www.dasgroupcertification.com
Email: info@dasgroupcertification.co.uk

IAF Registered ISO 9001:2000 UKAS

ZERTIFIKAT ◆ CERTIFICATE ◆ 인증서 ◆ СЕРТИФИКАТ ◆ CERTIFICADO ◆ CERTIFICAT

TÜV Product Service

CERTIFICATE

No. Z1 05 05 56080 001

Holder of Certificate: Hydro-Tek Co., Ltd.
107-12, Songjung-Ri, Mado-Myun
445-862 Hwasong-shi, Kyunggi-Do
KOREA

Certification Mark:

Product: Hydraulic Units
(Hydraulic Power Pack)

The product was tested on a voluntary basis and complies with the essential requirements. The certification mark shown above can be affixed on the product. See also notes overleaf.

Test report no.: MA6B0703115

Date, 2005-05-27
Page 1 of 2

TÜV Product Service GmbH · TÜV SÜD Gruppe · Zertifizierstelle · Ridlerstrasse 65 · 80339 München · Germany

---

인증번호 : 제 15330 호

CLEAN 사업장 인정서

사업장명 : 하이드로텍(주)
대 표 자 : 유 성 필
소 재 지 : 경기도 화성시 마도면 송정리 107-12

귀 사업장을 안전하고 쾌적한 「CLEAN 사업장」으로 인정합니다.

2005년 6월 23일

노 동 부 장

한국산업안전공단 이사장

EC Declaration of Conformity according to EC Machinery Directive 98/37/EC, Annex II A

We herewith declare, **Hydro-Tek Co., Ltd. 107-12, Songjung-Ri, Mado-Myun, 445-862, Hwasung-shi, Kyunggi-Do, KOREA**

that the following machine complies with the appropriate basic safety and health requirements of the EC Directive based on its design and type, as brought into circulation by us. In case of alteration of the machine, not agreed upon by us, this declaration will lose its validity.

Machine Description: Hydraulic Power Pack

Machine Type: Hydro-Tek DC power pack

Serial Number:

Applicable EC Directive: Machinery Directive (98/37/EC)
EMC Directive (89/336/EEC)

Applicable Harmonized Standards: EN ISO 12100-1: 2003
EN ISO 12100-2: 2003
EN 982:1996
EN 60204-1:2006

Date/ Authorized Signature: .....

Title of Signatory: HYDRO-TEK CO.,LTD.
PRESIDENT SUNG RYUL YOO
DIRECTOR OF ADMINISTRATION
DIRECTOR OF ADMINISTRATION

EC Declaration of Conformity according to EC Machinery Directive 98/37/EC, Annex II A

We herewith declare, **Hydro-Tek Co., Ltd. 107-12, Songjung-Ri, Mado-Myun, 445-862, Hwasung-shi, Kyunggi-Do, KOREA**

that the following machine complies with the appropriate basic safety and health requirements of the EC Directive based on its design and type, as brought into circulation by us. In case of alteration of the machine, not agreed upon by us, this declaration will lose its validity.

Machine Description: Hydraulic Power Pack

Machine Type: Hydro-Tek AC power pack-S

Serial Number:

Applicable EC Directive: Machinery Directive (98/37/EC)
EMC Directive (89/336/EEC)

Applicable Harmonized Standards: EN ISO 12100-1: 2003
EN ISO 12100-2: 2003
EN 982:1996
EN 60204-1:2006

Date/ Authorized Signature: .....

Title of Signatory: HYDRO-TEK CO.,LTD.
PRESIDENT SUNG RYUL YOO
DIRECTOR OF ADMINISTRATION
DIRECTOR OF ADMINISTRATION

EC Declaration of Conformity according to EC Machinery Directive 98/37/EC, Annex II A

We herewith declare, **Hydro-Tek Co., Ltd. 107-12, Songjung-Ri, Mado-Myun, 445-862, Hwasung-shi, Kyunggi-Do, KOREA**

that the following machine complies with the appropriate basic safety and health requirements of the EC Directive based on its design and type, as brought into circulation by us. In case of alteration of the machine, not agreed upon by us, this declaration will lose its validity.

Machine Description: Hydraulic Power Pack

Machine Type: Hydro-Tek AC power pack-T

Serial Number:

Applicable EC Directive: Machinery Directive (98/37/EC)
EMC Directive (89/336/EEC)

Applicable Harmonized Standards: EN ISO 12100-1: 2003
EN ISO 12100-2: 2003
EN 982:1996
EN 60204-1:2006

Date/ Authorized Signature: .....

Title of Signatory: HYDRO-TEK CO.,LTD.
PRESIDENT SUNG RYUL YOO
DIRECTOR OF ADMINISTRATION
DIRECTOR OF ADMINISTRATION

ZERTIFIKAT ◆ CERTIFICATE ◆ 인증서 ◆ СЕРТИФИКАТ ◆ CERTIFICADO ◆ CERTIFICAT

TÜV Product Service

CERTIFICATE

No. Z1 05 05 56080 002

Holder of Certificate: Hydro-Tek Co., Ltd.
107-12, Songjung-Ri, Mado-Myun
445-862 Hwasong-shi, Kyunggi-Do
KOREA

Certification Mark:

Product: Hydraulic Units
(Hydraulic Power Pack)

The product was tested on a voluntary basis and complies with the essential requirements. The certification mark shown above can be affixed on the product. See also notes overleaf.

Test report no.: MA6B0703115

Date, 2005-05-27
Page 1 of 2

TÜV Product Service GmbH · TÜV SÜD Gruppe · Zertifizierstelle · Ridlerstrasse 65 · 80339 München · Germany

CODING SYSTEM

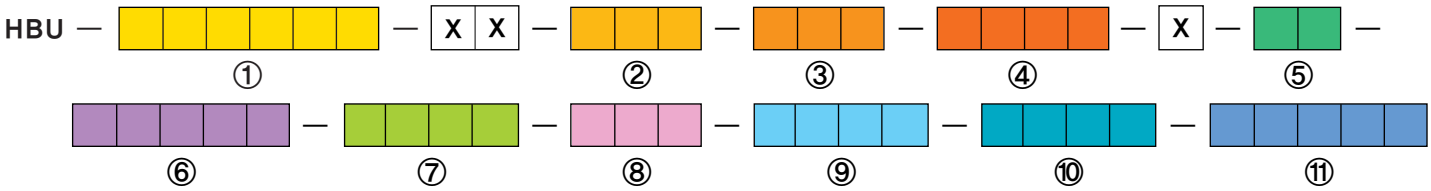

CODING INDEX

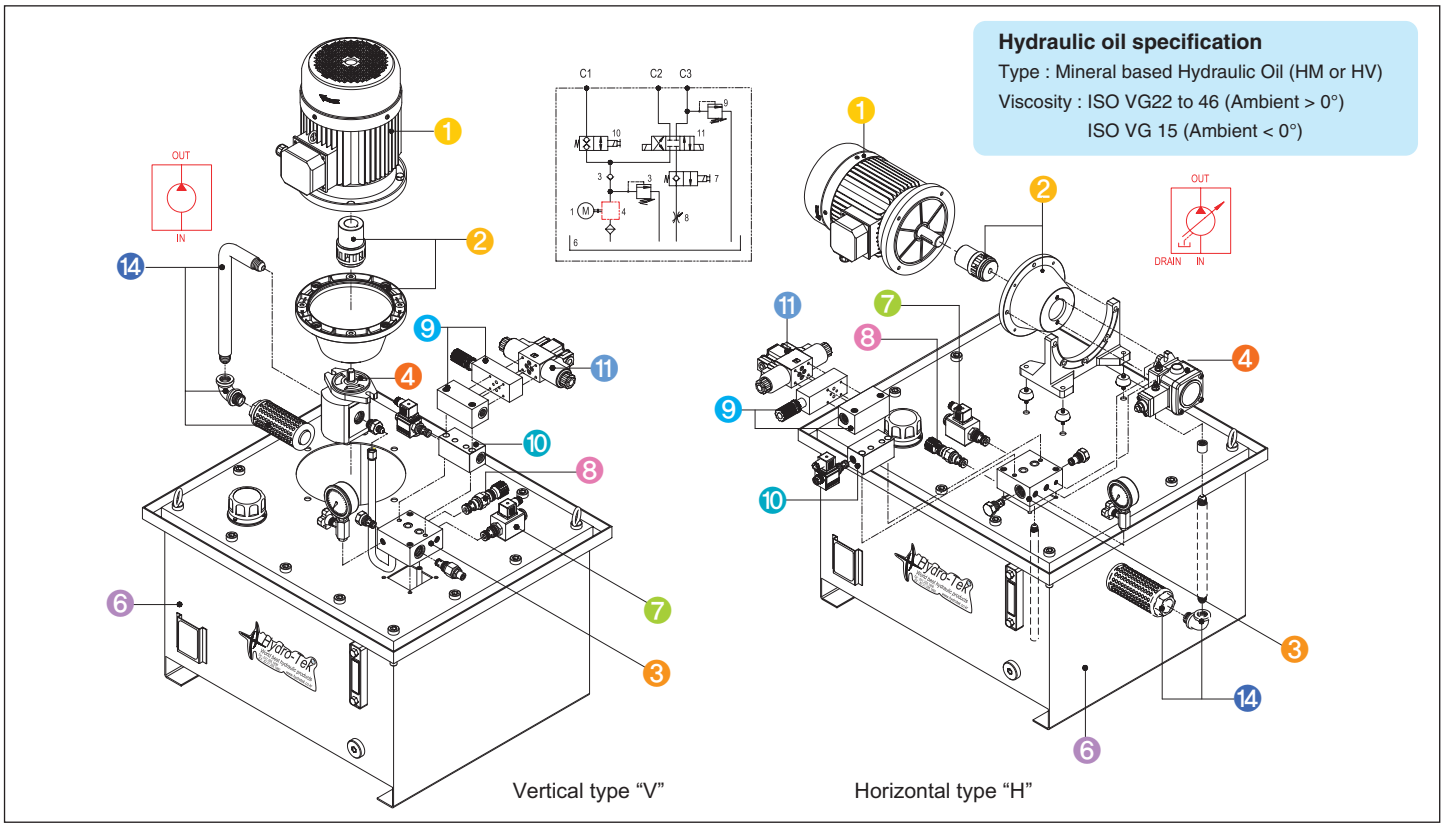

Order coding example

Description :
- Motor : 3phase 4pole 4.0Kw 50/60Hz
- Bell housing :112 frame
- Pump : Gear pump group 2 12cc/rev
  - Vane pump 12ℓ/min, 30~70 bar
- Base block : Lift v/v diagram with Speed control v/v [ ]
- Setting pressure : 180 bar / No relief valve in case of vane pump
- Mounting : Vertical. Terminal box orientation is to Southward
  - Horizontal. Terminal box orientation is to Eastward
- Tank : Square type 150 liter with oil receiver
- Diagram : One single acting and one double acting cylinder + RB1(R/V for B port)

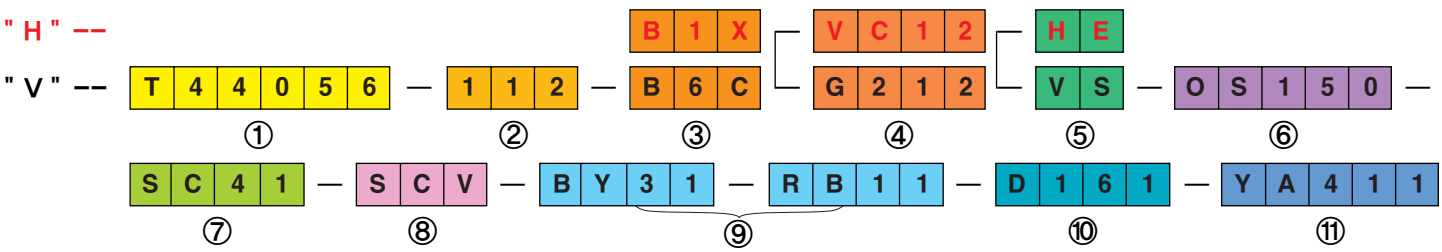

Note
1. In coding system, X is only for Hydro-Tek.
2. Please contact Hydro-Tek for special specification and different screw specification.

1 MOTOR

A / B / C – X X (X is only for maker's use)
Maker

A	Code	XXXXXX	H	S	T	F
	Voltage	X	110V	220V	230/400V	254/440V
	Phase	Without motor	AC Single-phase motor		AC Three-phase motor	

B

3 phase motor

Code		Specification											
pole	Kw	Frame	Kw	IP	A	B	C	D	E	F	G	H	I
4	15	090	1.5	54	185	285	50	165	200	12	24	27	8
4	22		2.2	54	185	315	50	165	200	12	24	27	8
4	40	112	4.0	54	230	335	60	215	250	15	28	31	8
4	55		5.5	54	230	335	60	215	250	15	28	31	8
4	55	132	5.5	54	270	356	80	265	300	15	38	41	10
4	75		7.5	54	270	395	80	265	300	15	38	41	10
4	92		9.2	54	270	420	80	265	300	15	38	41	10
4	A1		11	54	270	420	80	265	300	15	38	41	10

1 phase motor

Code		Dimension											
pole	Kw	Frame	Kw	IP	A	B	C	D	E	F	G	H	I
4	15	090	1.5	54	185	315	50	165	200	12	24	27	8
4	22	100	2.2	54	205	385	60	215	250	15	28	31	8
4	30		3.0	54	230	393	60	215	250	15	28	31	8
4	37	112	3.7	54	230	393	60	215	250	15	28	31	8

4pole 60Hz 1700 RPM
4pole 50Hz 1500 RPM

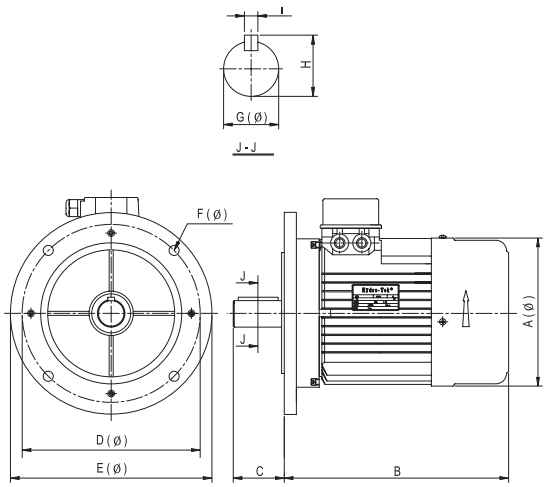

C

Code	50	60	56
Frequency (Hz)	50	60	56

Note
1. 3-phase motor is double frequency type (50/60Hz)
2. 1-phase motor is single frequency type (50Hz or 60Hz)

Note Please contact Hydro-Tek for 2pole and 6pole motors over 11kw and DC application. (HBU with DC motor)

2 Bell housing and Coupling

A

Bell housing

Code	Specification										
Frame	A	B	C	D	E	F	G	H	I	J	K
090	130	165	200	82.55	135	16	104	11	M10	106	M10
112	180	215	250	82.55	183	21	114	14	M12	106	M10
132	230	265	300	82.55	235	21	134	14	M12	106	M10
for gear pump and vane pump (12, 15, 20 ℓ/min)											
Frame	A	B	C	D	E	F	G	H	I	J	K
090	130	165	200	95.05	135	16	104	11	M10	90	M10
112	180	215	250	95.05	183	21	114	14	M12	90	M10
132	230	265	300	95.05	235	21	134	14	M12	90	M10
for vane pump (30, 40 ℓ/min)											

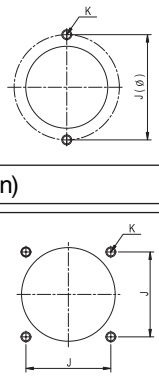

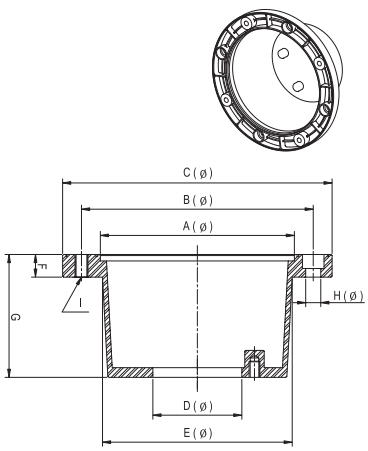

Coupling

Frame	A	B	C	D	E	F	G	H
090	46.5	17	26	42	48	24	27	8
112	56	18	25	50	58	28	31	8
132	76	22	21	68	78	38	41.3	10

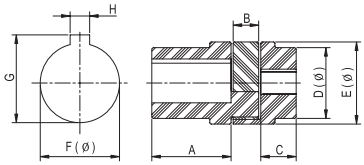

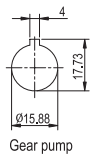

Gear pump

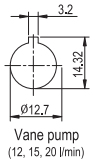

Vane pump
(12, 15, 20 l/min)

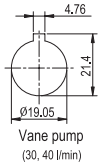

Vane pump
(30, 40 l/min)

Note Couplings are designed to be used with Urethane insert. If you want to order only coupling, please refer p.17 coupling information.

Base block

A

Base block diagram

Code	B0	B1	B2	B3	B4	B5/B6/B7
Diagram	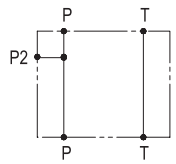	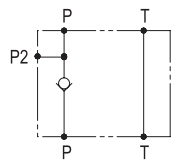	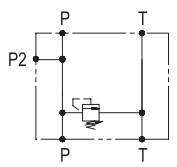	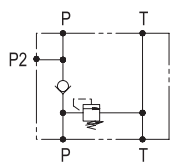	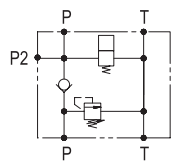	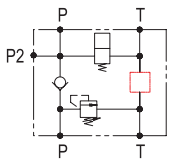

B5 = B4 + F.T.V [ ] / B6 = B4 + S.C.V [ ] / B7 = B4 + P.C.V [ ]

Dimensions

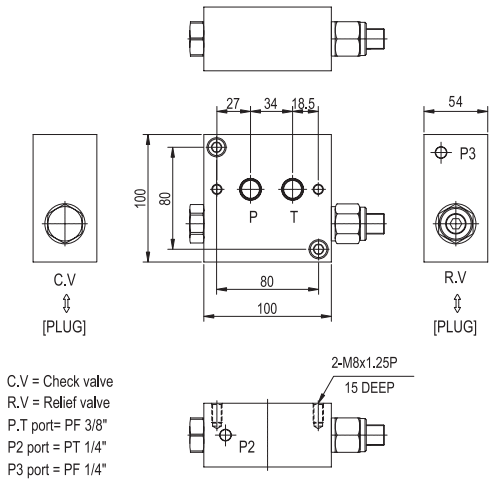

C.V = Check valve
R.V = Relief valve
P.T port= PF 3/8"
P2 port = PT 1/4"
P3 port = PF 1/4"

Applicable base block : B0, B1, B2, B3

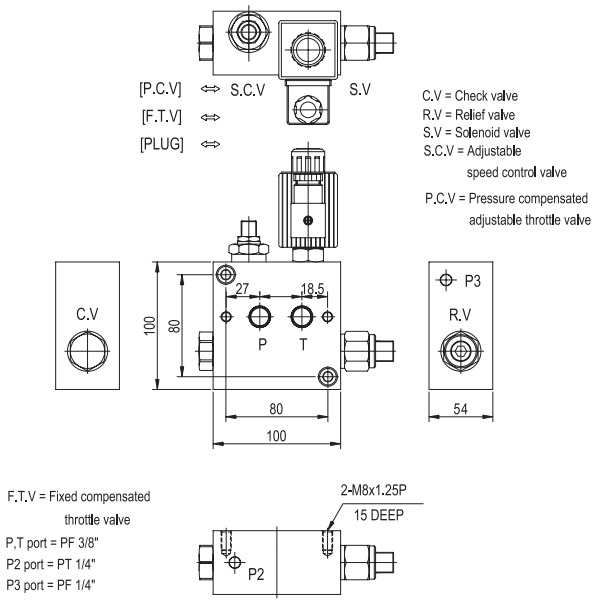

C.V = Check valve
R.V = Relief valve
S.V = Solenoid valve
S.C.V = Adjustable speed control valve
P.C.V = Pressure compensated adjustable throttle valve

F.T.V = Fixed compensated throttle valve
P,T port = PF 3/8"
P2 port = PT 1/4"
P3 port = PF 1/4"

Applicable base block : B4, B5, B6, B7

M1

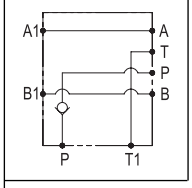

M2

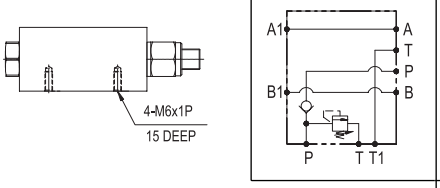

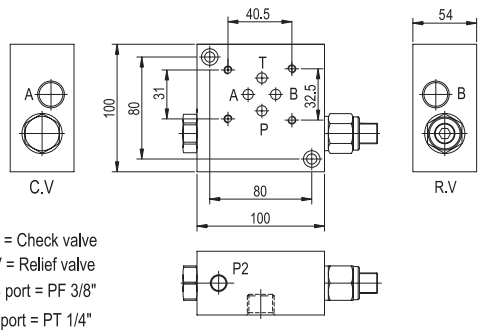

C.V = Check valve
R.V = Relief valve
A,B port = PF 3/8"
P2 port = PT 1/4"

Applicable base block : M1 (B1+BY3), M2 (B3+BY3)

M3

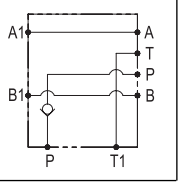

M4

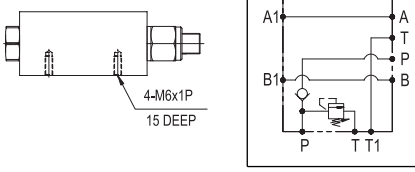

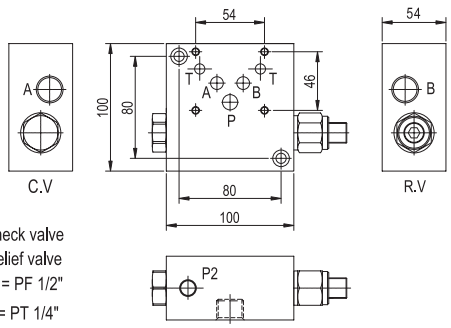

C.V = Check valve
R.V = Relief valve
A,B port = PF 1/2"
P2 port = PT 1/4"

Applicable base block : M3 (B1+BB3), M4 (B3+BB3)

Note

1. Please contact Hydro-Tek for different thread specification of P, T, A, B Ports.
2. Please see page 12 for multi-manifold block.

B

Base block pressure range

Code	A	B	C	D	X
Pressure range	5 ~ 40 bar	20 ~ 80 bar	50 ~ 220 bar	180 ~ 350 bar	without relief valve

A	Code	G	V	F
	Pump type	Gear pump	Variable displacement vane pump	Fixed displacement vane pump

A — Gear pump G

B / C

Code B Group	Code C CC/REV	Specification Displacement (cc/rev)	Flow (ℓ/min) @1700 RPM	Max. operating pressure	Max. peak pressure	A	B	C	D
2	04	4.0	6.8	280	310	44	96	1/2	1/2
2	06	6.0	10.2	280	310	45	98	1/2	1/2
2	07	7.0	11.9	280	310	45.7	99.5	1/2	1/2
2	08	8.0	13.6	280	310	46.7	101	1/2	1/2
2	10	10.0	17.0	280	310	48	104	1/2	1/2
2	12	12.0	20.4	280	310	50	108	1/2	1/2
2	14	14.0	23.8	260	290	51	110	3/4	1/2
2	16	16.0	27.2	260	290	53	114	3/4	1/2
2	18	18.0	30.6	260	290	54.5	117	3/4	1/2
2	20	20.0	34.0	230	260	56	120	3/4	1/2
2	22	22.0	37.4	230	260	57.5	123	3/4	1/2
2	25	25.0	42.5	210	240	60	128	3/4	1/2
2	28	28.0	47.6	200	230	62.5	133	3/4	1/2
2	30	30.0	51.0	180	210	64	136	3/4	1/2
2	32	32.0	54,4	180	210	65	138	3/4	1/2
2	34	34.0	57.8	160	190	67	142	3/4	1/2
2	36	36.0	61.2	160	190	68.5	145	3/4	1/2

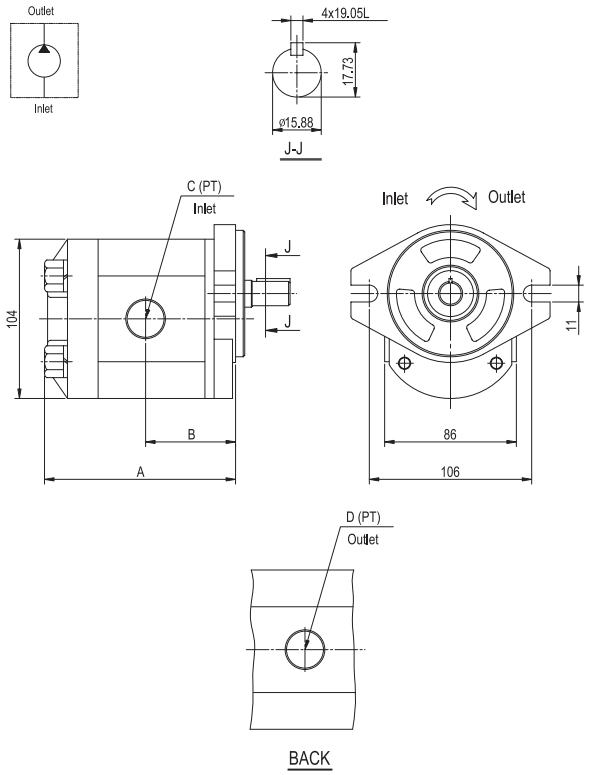

Group 2 gear pump rotation is CW

Note Please contact Hydro-Tek for Group 1, 3, CCW rotation, other flange types and etc.

A — Variable displacement vane pump V

B	Code	A	B	C
	pressure range	8 ~ 18 BAR	14 ~ 35 BAR	30 ~ 70 BAR

C

Code	Specification Displacement (cc/rev)	Flow (ℓ/min) @1800 RPM	Rated pressure (bar)	A	B	C
12	6.6	12	70	1/2	3/8	1/4
15	8.3	15	70	1/2	3/8	1/4
20	11.0	20	70	1/2	3/8	1/4
30	16.6	30	70	3/4	1/2	1/4
40	22.2	40	70	3/4	1/2	1/4
-	-	-	-	-	-	-
-	-	-	-	-	-	-
-	-	-	-	-	-	-
-	-	-	-	-	-	-

Dimension

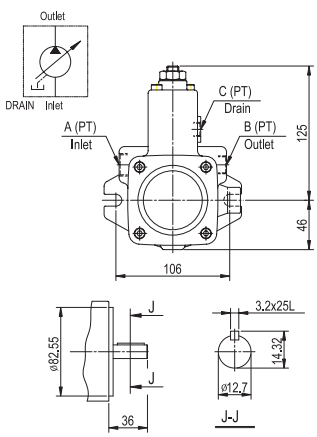

Applicable Pump : Vane pump (12, 15, 20 l/min)

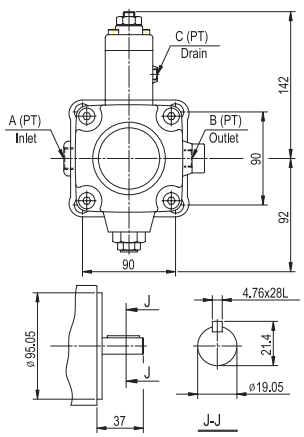

Applicable Pump : Vane pump (30, 40 l/min)

Note Please contact Hydro-Tek for Fixed displacement vane pump and piston pump.

5 A / B Mounting

A	Code	V	H
	Motor mounting	Vertical	Horizontal

B	Code	S	N	E	W
	Terminal box Orientation	Southward	Northward	Eastward	Westward

A / B

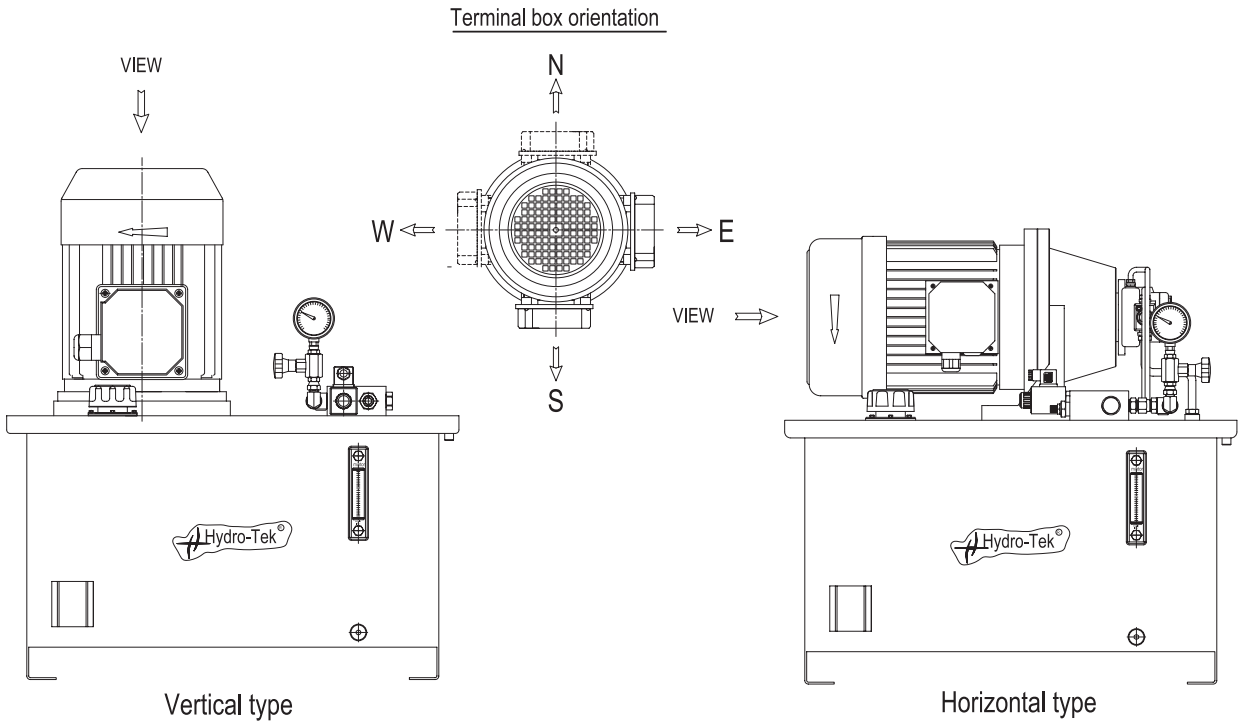

Note Please contact Hydro-Tek for your special specification and customizing.

Accessory for horizontal motor

Foot flange

Applicable to bell housing	Specification						
	A	B	C	D	E	F	G
090 frame	140	165	123	11.5	168	103	9
112 frame	180	215	150	13	220	130	11
132 frame	240	265	175	13	265	160	13

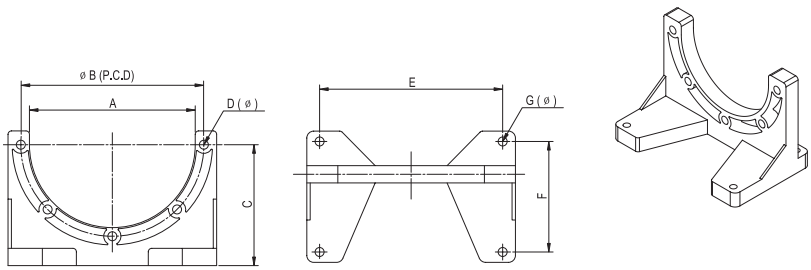

Vibration resister

Applicable for bell housing	Specification			
	A	B	C	D
090 frame	68	24	40	M8
112 frame	90	40	50	M10
132 frame	115	45	60	M12

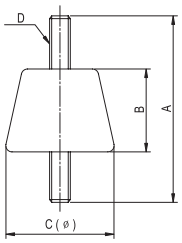

Note
Made of rubber it can absorb noises and vibration of motor, so it allows silent operation.

Tank

A																	
Code	BS			OS			BA				OA				BR		
Type	Square type oil tank without oil receiver			Square type oil tank with oil receiver			Aluminum oil tank without oil receiver				Aluminum oil tank with oil receiver				Round type oil tank		
Code	030	050	070	100	120	150	010	015	030	050	-	-	030	050	010	015	022
Cap. ℓ	40	65	90	130	150	195	15	20	35	62	-	-	35	62	14	25	28
Working cap. ℓ	30	50	70	100	120	150	10	15	30	50	-	-	30	50	10	15	22

B

Square type oil tank BS · OS

Code	Specification				
	A	B	C	D	E
030	490	340	335	554	404
050	595	450	395	659	514
070	650	450	450	714	514
100	700	600	450	764	664
120	800	600	450	864	664
150	900	600	450	964	664
-					
-					

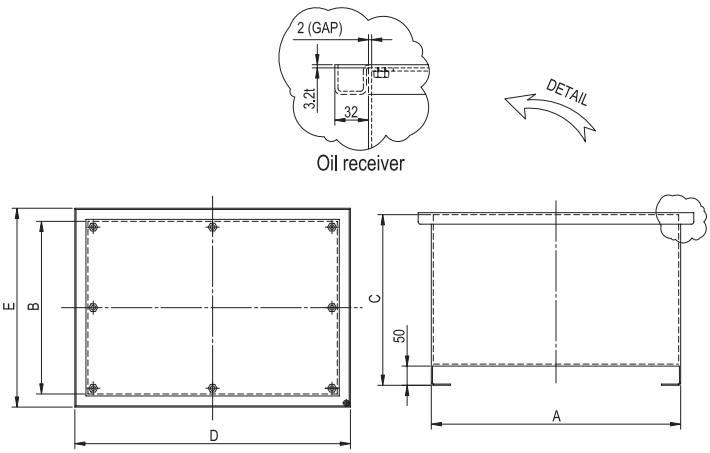

Aluminum oil tank for only vertical type unit BA · OA

Code	Specification				
	A	B	C	D	E
010	335	247	220	404	311
015	368	290	243	432	354
030	490	340	285	554	404
050	595	450	345	659	514
-					
-					
-					
-					

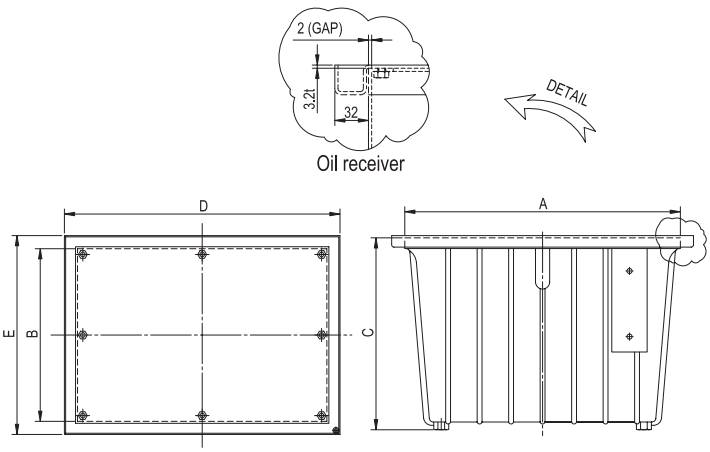

Round type oil tank BR

Code	Specification				
	A	B	C	D	E
010	292	267.4	279.4	279.4	200
015	497	267.4	279.4	279.4	200
022	570	267.4	279.4	279.4	200
-					
-					
-					
-					
-					
-					

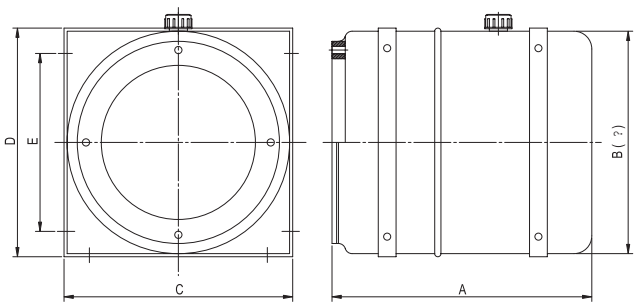

These tanks can be applied only to 90 and 112 frames.

Note Please contact Hydro-Tek for your special specification and customizing.

7 A / B / C / D

Built-in valve

A	Code	S	NNNN
	Type	Solenoid valve	Plug for cavity

B	Code	C	O	D
	Type	Normally closed type	Normally open type	Double lock type

C	Code	1	2	3	4	5	6	7
	Voltage	DC12V	DC24V	AC 110V	AC 220V	AC 110V	AC 220V RAC	AC 24V

D	Code	Specification			
		Cavity	Working pressure (Max.)	Flow (Max.)	Internal leakage
	1	08	280 bar	40 ℓ/min	0.15 cc/min
	3	10	350 bar	68 ℓ/min	0.15 cc/min

Base Block Built-in valve

Relief valve	
Code	Pressure range
A	5 ~ 40 bar
B	20 ~ 80 bar
C	50 ~ 220 bar
D	180 ~ 350 bar
X	Without relief valve

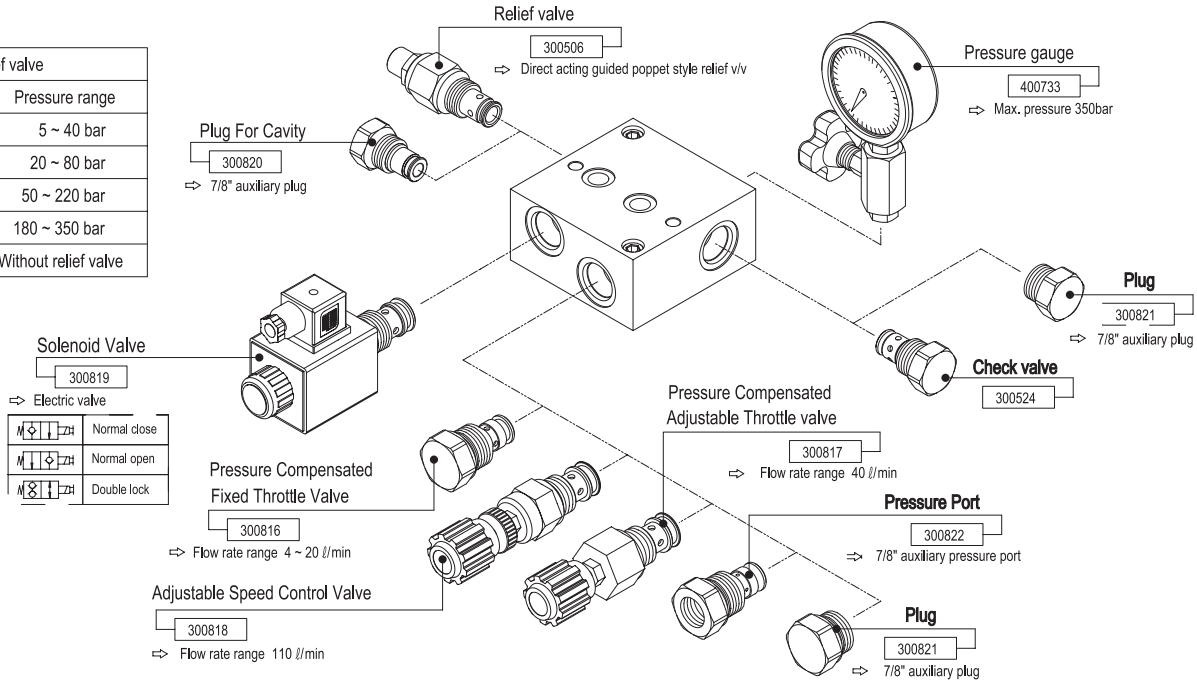

Note Please use parts no., when you order the loose components.

8 A

Setting compensated throttle valve

A	Pressure compensated fixed throttle valve (K Series)								
	Code	K04	K08	K12	K16	K20	Diagram	Application	Dimension
	Regulated flow rate (ℓ/min)	4	8	12	16	20		B5	UNF 7/8-14, ø15.87, 42.9

A	Adjustable speed control valve				
	Code	SCV	Diagram	Application	Dimension
	Regulated flow rate (ℓ/min)	110		B6	UNF 7/8-14, ø15.87, 82 (MAX)

A	Pressure compensated adjustable throttle valve				
	Code	PCV	Diagram	Application	Dimension
	Regulated flow rate (ℓ/min)	40		B7	UNF 7/8-14, ø15.87, 96 (MAX)

9 Modular block

A / B – A / B

Note If you need more than 2pcs of different modular blocks, please specify them in the next blank.

A	Code	**Modular block code**
B	Quantity	**Quantity** of Modular blocks

	Code	Description	Diagram	Dimension
A	**BY5**	Spacing element. Element with ports PF3/8"	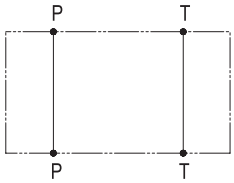	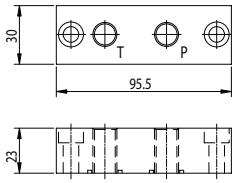 P,T port = PF3/8"
	BY1	Element with ports PF1/2"	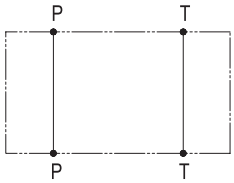	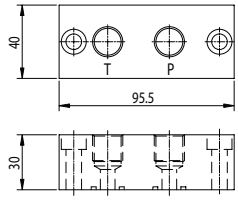 P,T port = PF1/2"
	BY6	Element with ports PF3/4"	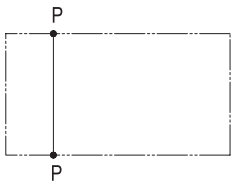	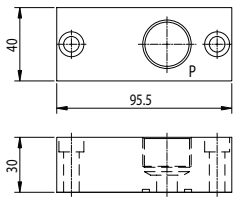 P port = PF3/4"
	BY3	Element for solenoid valves CETOP 3 manifold block-01 parallel connection	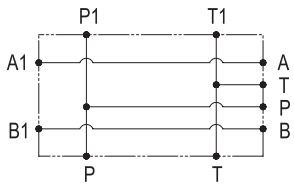	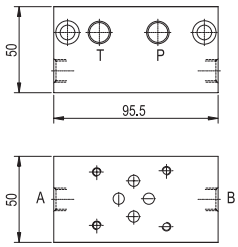 P,T port = PF3/8" A,B port = PF3/8"
	BY2	Element for solenoid valves CETOP 3 manifold block-01 series connection	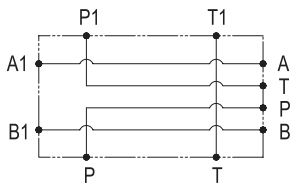	
	BB3	Element for solenoid valves CETOP 5 manifold block-03 parallel connection	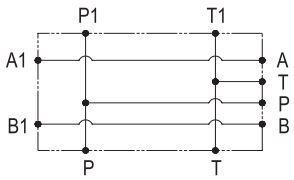	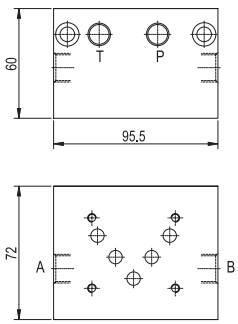 P,T port = PF3/8" A,B port = PF1/2"
	BB2	Element for solenoid valves CETOP 5 manifold block-03 series connection	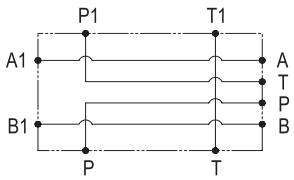	

	Code	Description	Diagram	Dimension
A	**BY4**	Element for solenoid valves CETOP 3 manifold block-01 with pilot operated check valve on A and B	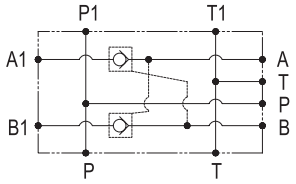	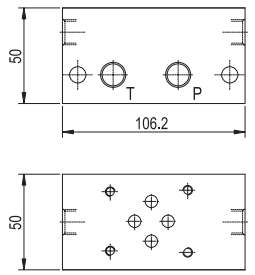 P,T port = PF3/8" A,B port = PF3/8" Q max = 20ℓ/min
	BY7	Element for solenoid valves 3 manifold block-01 with pilot operated check valve on A	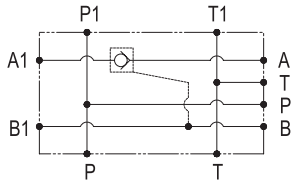	
	BY8	Element for solenoid valves CETOP 3 manifold block-01 with pilot operated check valve on B	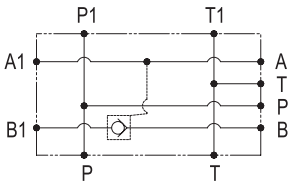	
	CP1	Element CETOP 3 with check valve HCP-01-0	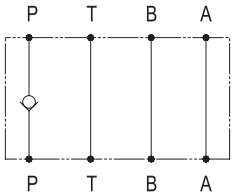	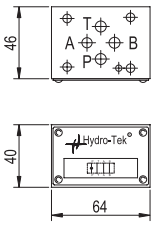 Q max = 40ℓ/min
	CP3	Element CETOP 5 with check valve HCP-03-0	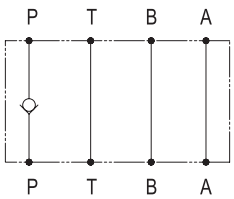	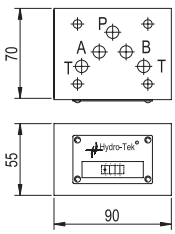 Q max = 80ℓ/min
	RP1	Element CETOP 3 with relief valve on P HBP-01-C	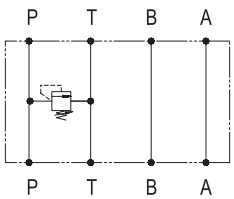	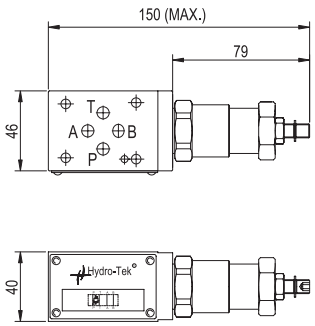 Q max = 35ℓ/min
	RA1	Element CETOP 3 with relief valve on A HBA-01-C	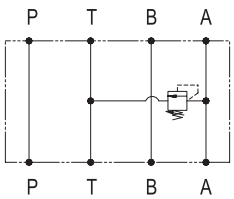	
	RB1	Element CETOP 3 with relief valve on B HBB-01-C	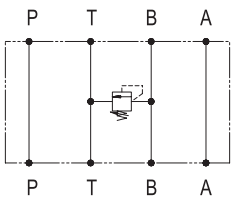	

	Code	Description	Diagram	Dimension
A	**RP3**	Element CETOP 5 with relief valve on P HBP-03-C	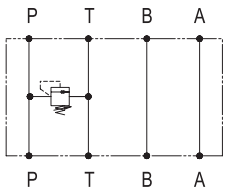	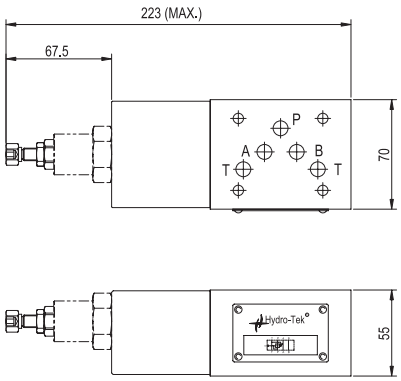 Q max = 70ℓ/min
	RA3	Element CETOP 5 with relief valve on A HBA-03-C	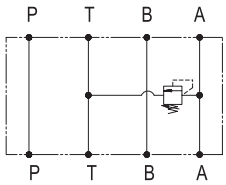	
	RB3	Element CETOP 5 with relief valve on B HBB-03-C	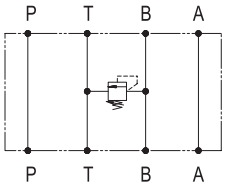	
	PW1	Element CETOP 3 pilot operated check valve on A and B HPW-01-2	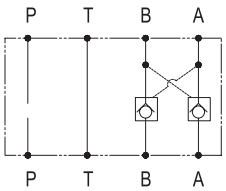	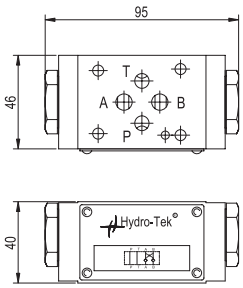 Q max = 35ℓ/min
	PA1	Element CETOP 3 pilot operated check valve on A HPA-01-2	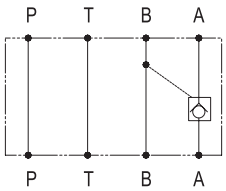	
	PB1	Element CETOP 3 pilot operated check valve on B HPB-01-2	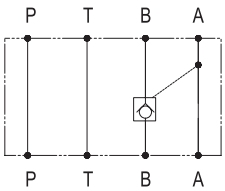	
	PW3	Element CETOP 5 pilot operated check valve on A and B HPW-03-2	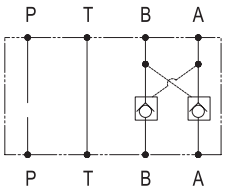	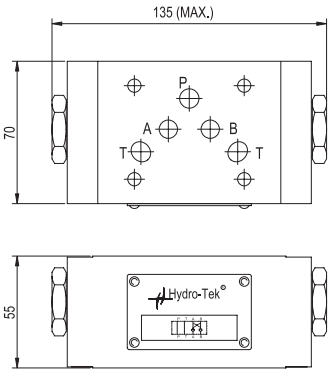 Q max = 70ℓ/min
	PA3	Element CETOP 5 pilot operated check valve on A HPA-03-2	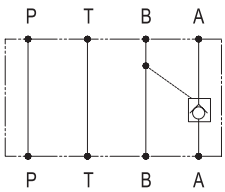	
	PB3	Element CETOP 5 pilot operated check valve on B HPB-03-2	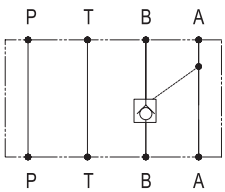	

	Code	Description	Diagram	Dimension
A	TW1	Element CETOP 3 throttle and check valve on A and B HSW-01-X(Y) (X : Meter-out, Y : Meter-in)	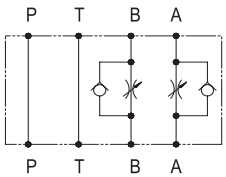	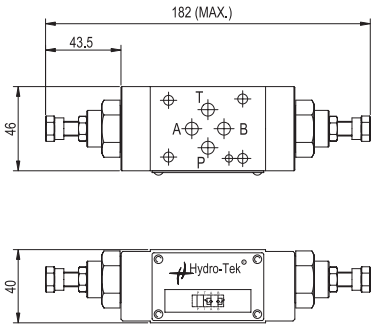 Q max = 60ℓ/min
	TA1	Element CETOP 3 throttle and check valve on A HSA-01-X(Y) (X : Meter-out, Y : Meter-in)	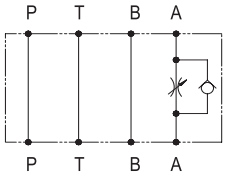	
	TB1	Element CETOP 3 throttle and check valve on B HSB-01-X(Y) (X : Meter-out, Y : Meter-in)	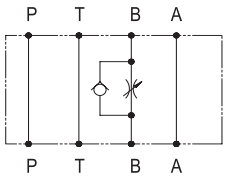	
	TW3	Element CETOP 5 throttle and check valve A and B HSW-03-X(Y) (X : Meter-out, Y : Meter-in)	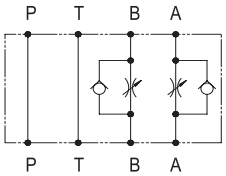	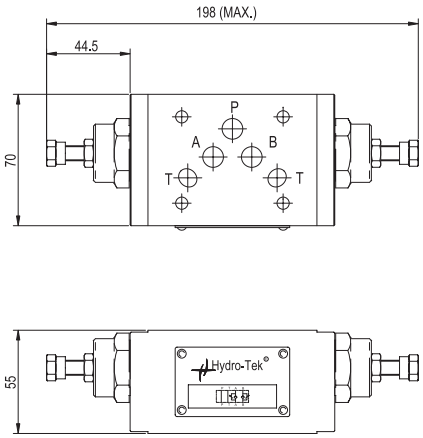 Q max = 70ℓ/min
	TA3	Element CETOP 5 throttle and check valve on A HSA-03-X(Y) (X : Meter-out, Y : Meter-in)	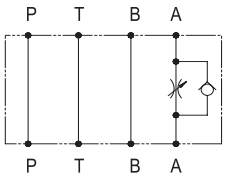	
	TB3	Element CETOP 5 throttle and check valve on B HSB-03-X(Y) (X : Meter-out, Y : Meter-in)	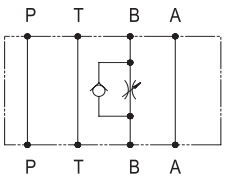	

Note Please contact Hydro-Tek for different specification of modular block.

9 A / B / C / D

Multi-manifold block

A	Code	Multi-manifold block M

B	Code	4	5	6	7	8
	Quantity of circuit	4ports	5ports	6ports	7ports	8ports

C	Code	1	3
	Type	CETOP 3	CETOP 5

D	Code	1	2	3	4	5	6
	Port size	PF 3/8"	PT 3/8"	NPT 3/8"	PF 1/2"	PT 1/2"	NPT 1/2"

Dimension

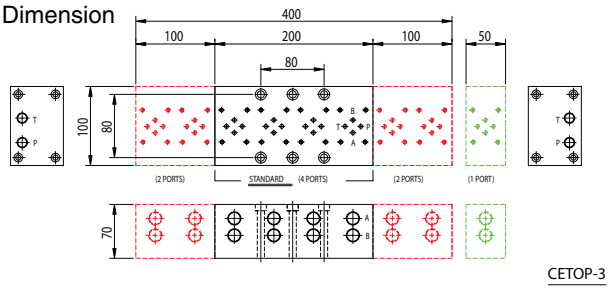

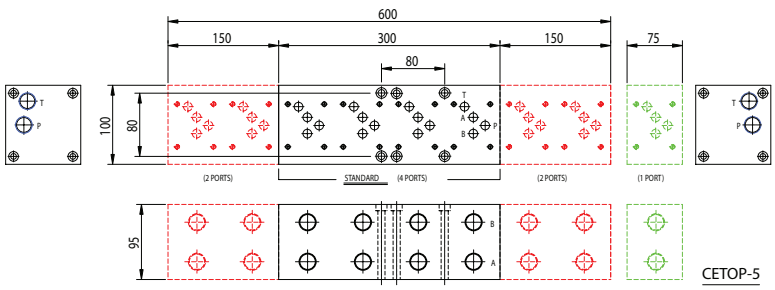

Note
1. Please use multi-manifold blocks for more than 3 ports.
2. Please contact Hydro-Tek for more than 8 ports multi-manifold block.

Modular block with cartridge solenoid valve

10 A / B / C – A / B / C

Note If you need more than 2pcs of different modular blocks, please specify them in the next blank

A	Code	**Modular block with cartridge solenoid valve code**

B	Code	**1**	**2**	**3**	**4**	**5**	**6**	**7**
	Voltage	DC 12V	DC 24V	AC 110V	AC 220V	AC 110V RAC	AC 220V RAC	AC 24V

C	Quantity	**Quantity** of Modular blocks with cartridge solenoid valve

A

Code	Description	Diagram	Dimension
D1	Element for double locking direct solenoid valve	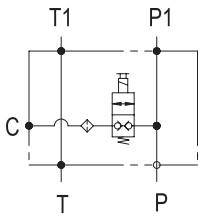	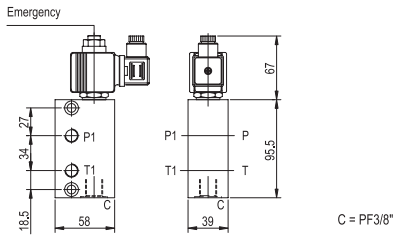
DC	Element for normal close type direct solenoid valve	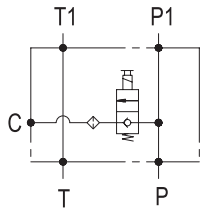	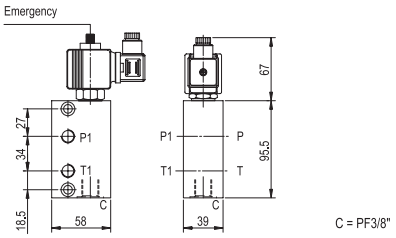
DY	Element for normal close type direct solenoid valve	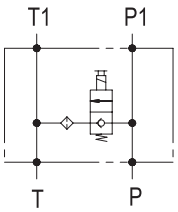	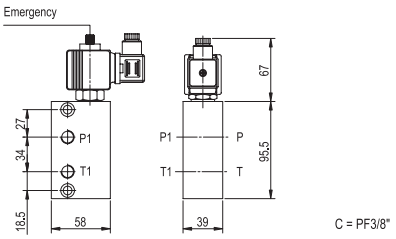
D2	Element for double locking direct solenoid valve	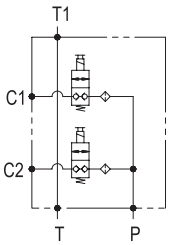	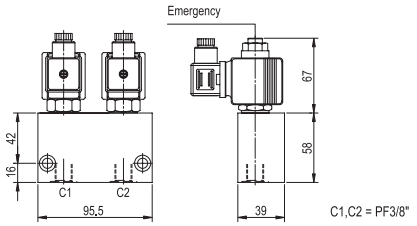
DO	Element for two double locking direct solenoid valve	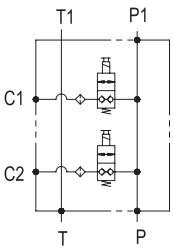	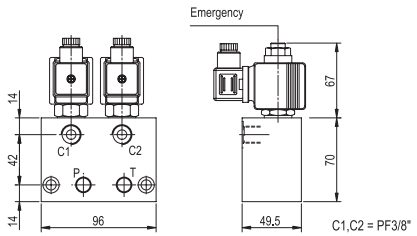
D3	Element for three double locking direct solenoid valve	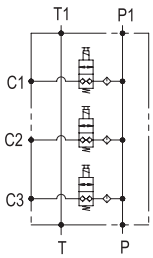	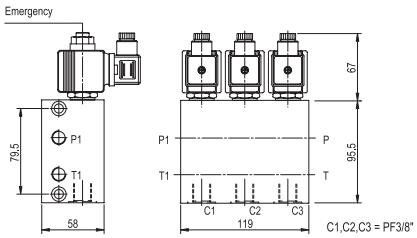

	Code	Description	Diagram	Dimension
A	SS	Single acting speed control (CETOP 3)	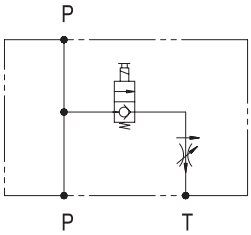	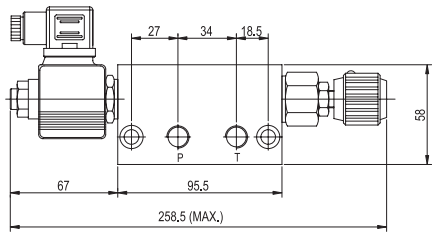
	DS	Double acting speed control (CETOP 3)	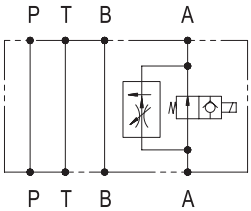	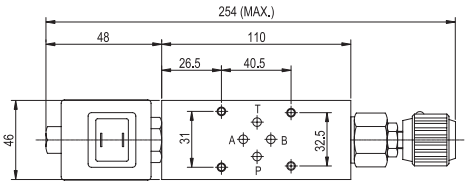

11 A / B / C / D — *Directional valve*

A	Code	**Solenoid valve code**

B	Code	1	2	3	4
	Voltage	DC 12V	DC 24V	AC 110V	AC 220V

C	Quantity	**Quantity** of Directional valves

D	Code	Specification			
		Type	Working pressure (Max.)	Flow (Max.)	Connecting type
	1	CETOP 3	315 bar	63 ℓ/min	Terminal box
	3	CETOP 5	315 bar	100 ℓ/min	Terminal box

	Code	Diagram
A	YA	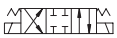
	YP	
	YC	
	YO	
	YT	
	HA	
	HP	
	HC	
	HO	
	HB	

Solenoid valve series - CETOP 3 dimension

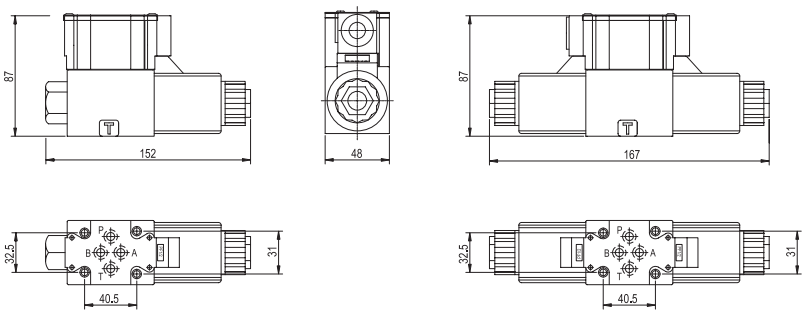

Solenoid valve series - CETOP 5 dimension

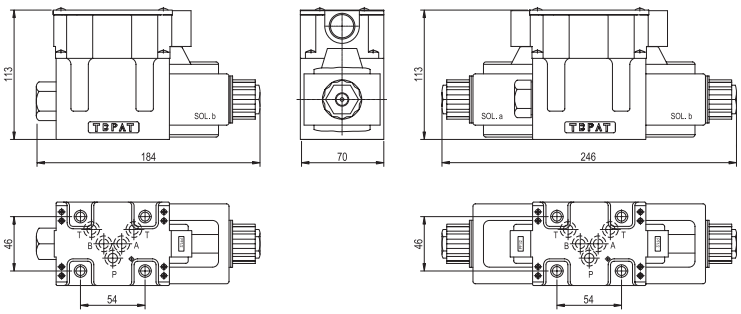

Note Please contact Hydro-Tek for detent type and manual type.

Big power unit dimension										
Motor							Tank (Square type oil tank)			
Phase	Frame	Kw	A(mm)	B(mm)	B'(mm)	B"(mm)	Working cap. ℓ	C(mm)	D(mm)	E(mm)
3 phase motor	090	1.5 /2.2	185	301 / 331	239.5	147	030	554	404	338
	112	4.0 / 5.5	230	356	305	190	050	659	514	398
	132	5.5 / 7.5	270	377 / 415	355	220	070	714	514	453
		9.2 / 11	270	441	355	220	070	714	514	453
1 phase motor	090	1.5	185	331	239.5	147	100	764	664	453
	100	2.2	205	406	292.5	190	120	864	664	453
	132	3.0 / 3.7	230	414	335	220	150	964	664	453

Dimension

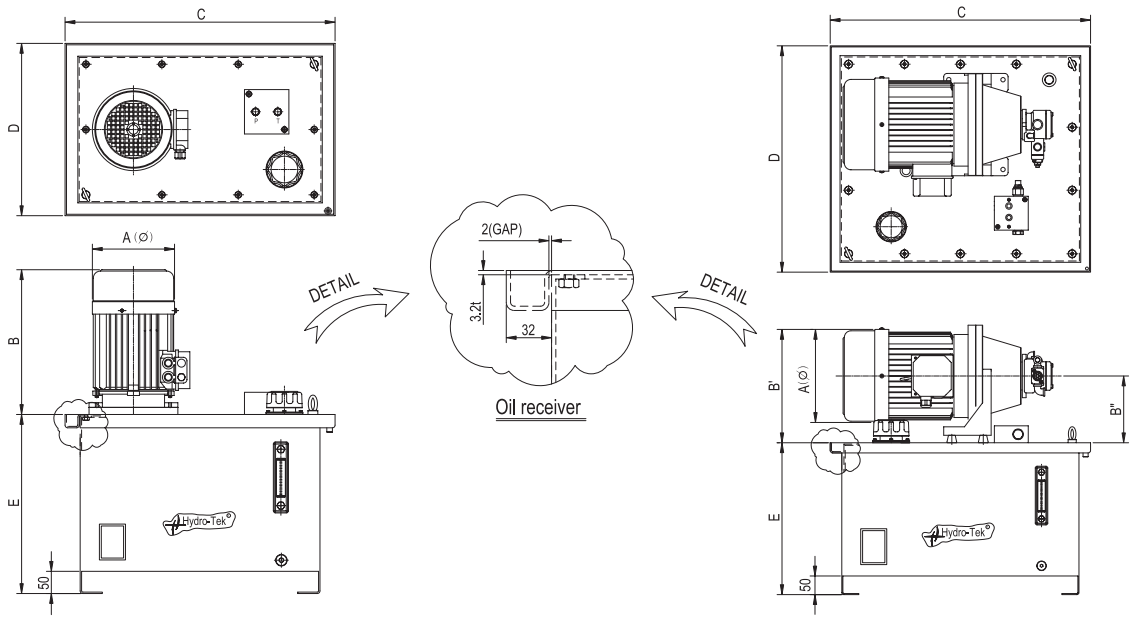

Vertical type

Horizontal type

13 A (Others) Hand pump

	Code	Description	Diagram	Dimension
A	HP	Single acting hand operated pump element	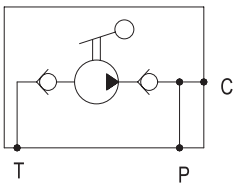	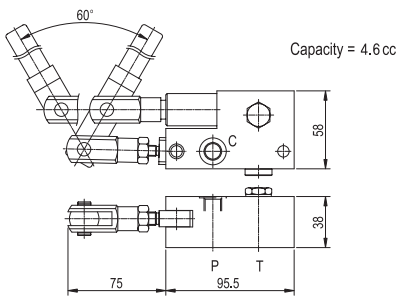
	KP	Single acting hand operated pump element	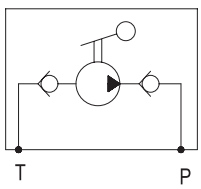	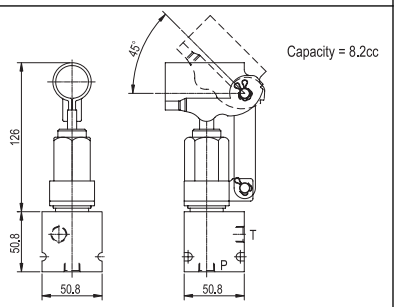

13 A / B — (Others) Compensated adjustable throttle valve & Flow control valve

A	Code	Compensated adjustable throttle valve **P**			Flow control valve **F**		
B	Code	**400**	**600**	**800**	**400**	**600**	**800**
	Port	PT 1/4"	PT 3/8"	PT 1/2"	PT 1/4"	PT 3/8"	PT 1/2"
	Flow (Max.)	1 ~ 10 ℓ/min	1 ~ 18 ℓ/min	1 ~ 33 ℓ/min	20 ℓ/min	55 ℓ/min	110 ℓ/min
	Pressure (Max.)	250 bar	250 bar	250 bar	350 bar	350 bar	350 bar
	A (mm)	90	90	107	65	70	87
	B (mm)	27	27	36	20	25	32
	C (mm)	38	38	41	34	45	44
	D (mm)	24	24	30	24	30	30

Diagram & Dimension

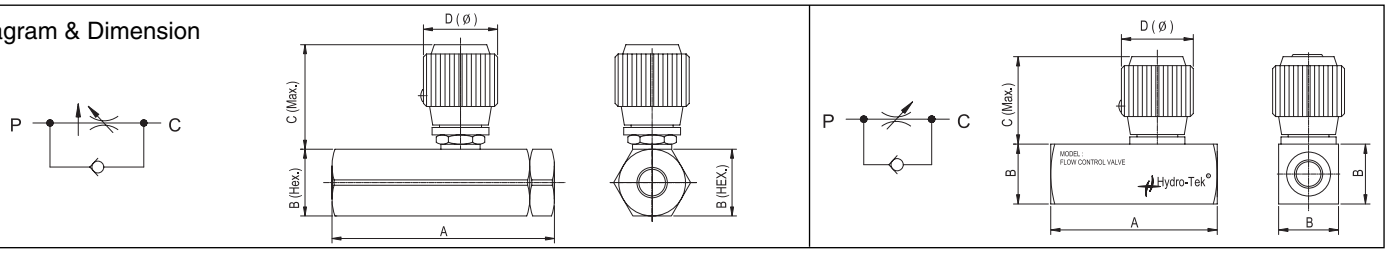

Note Please contact Hydro-Tek for different thread specification.

13 A / B / C / D — (Others) Solenoid valve

A	Code	Solenoid valve **V**		
B	Code	**C**	**O**	**D**
	Type	Normally closed	Normally open	Double lock

C	Code	**1**	**2**	**3**	**4**	**5**	**6**	**7**
	Voltage	DC12V	DC24V	AC 110V	AC 220V	AC 110V RAC	AC 220V RAC	AC 24V

D	Code	**1**			**3**		
	Specification	Cavity	Pressure (Max.)	Flow (Max.)	Cavity	Pressure (Max.)	Flow (Max.)
		08	250bar	40 ℓ/min	10	350bar	68 ℓ/min

Diagram

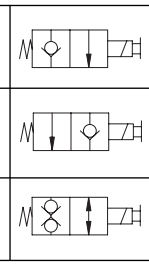

Dimension

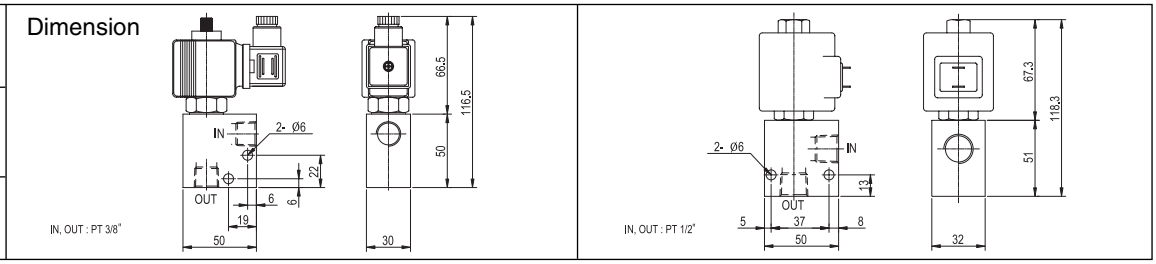

13 A / B — (Others) Burst valve

A	Code	Burst valve **B**

B	Code	**400**	**600**	**800**
	Port	PT 1/4	PT 3/8	PT1/2
	Flow (Max.)	25 ℓ/min	50 ℓ/min	80 ℓ/min
	A (mm)	17.5	8	9.5
	B (mm)	23	10.5	12.5
	C (mm)	25	12	15

Diagram & Dimension

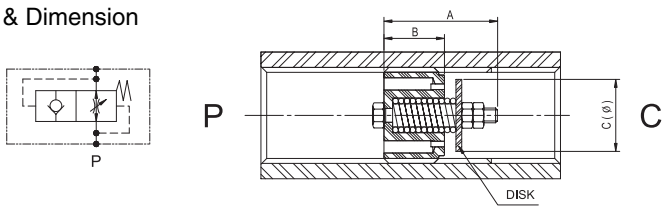

14 A / B (Hydraulic Accessories) Filter

A	Code	Suction filter FS		Return filter FR		Line filter FL	
B	Code	01	03	01	03	01	03
	Thread (PT)	1/2	3/4	3/4	3/4	1/2	3/4
	Flow (ℓ/min)	22	56	40	40	55	95
	A (mm)	109	139	Note: Please refer to dimensional drawing below.		219	319
	B (mm)	64	64			45	45
	C (mm)	36	36			5/16 UNC	5/16 UNC

Dimension

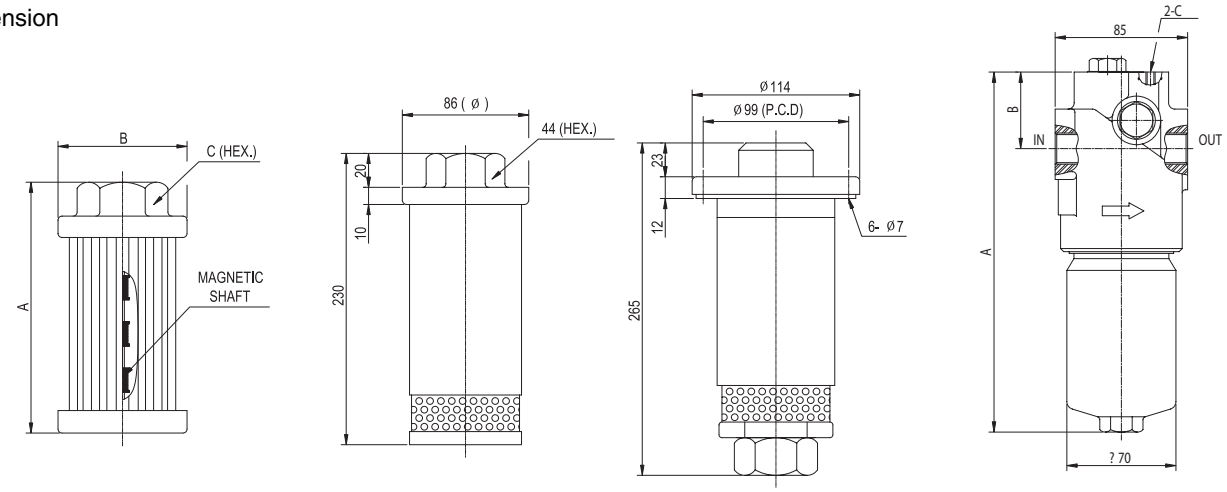

SUCTION FILTER RETURN FILTER LINE FILTER

14 A / B (Hydraulic Accessories) Air breather

A	Code	Air breather AB	
B	Code	01	03
	Filtration rating (㎛)	40	40
	Flow (ℓ/min)	700	960
	A (mm)	80	100
	B (mm)	52	73
	C (mm)	150	100
	D (mm)	50	58
	E (mm)	73	88
	F (mm)	83	105
	G (mm)	M5	M6

Dimension

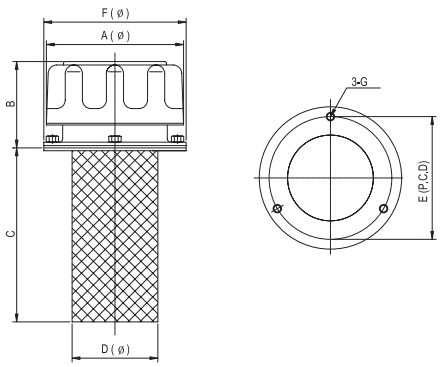

14 A / B (Hydraulic Accessories) Coupling

A / B	Motor		Urethane		PUMP						Dimension
					Gear pump		Vane pump (12, 15, 20 ℓ/min)		Vane pump (30, 40 ℓ/min)		
	Code	Frame	Code	Frame	Code	Frame	Code	Frame	Code	Frame	
	MC	090	UR	090	G2	090	V1	090	V2	090	
	MC	112	UR	112	G2	112	V1	112	V2	112	
	MC	132	UR	132	G2	132	V1	132	V2	132	

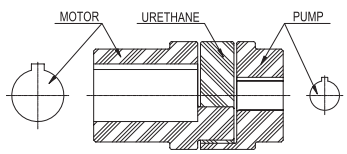

** Please refer to "Coding No.2" for detail dimension
(See page 3)

14 A / B (Hydraulic Accessories) Oil gauge

A	Code	Oil gauge G

B	Code	01	03
	A (mm)	160	287
	B (mm)	34	34
	C (mm)	88	215
	D (mm)	16.5	16.5
	E (mm)	127	254
	F (mm)	M12	M12
	G (mm)	21.5	21.5
	H (mm)	16	29
	I (mm)	16	29

Dimension

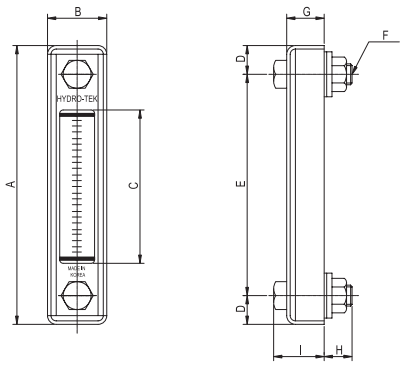

14 A / B / C (Hydraulic Accessories) Cooler

A	Code	Cooler C

B / C	Code		Specification								
	Phase	Type	Voltage	Frequency	RPM	Power	Q air	Cap.	IP	A (mm)	B (mm)
	S	01	230V	50/60Hz	2650/3000	50/46W	500㎥/h	5~40 ℓ/min	44	243	125
		03	230V	50/60Hz	2600/2900	64/78W	890㎥/h	20~80 ℓ/min	44	282	152
	T	01	230/400V	50/60Hz	2750/3100	45/43W	500㎥/h	5~40 ℓ/min	44	243	125
		03	230/400V	50/60Hz	2600/2900	68/70W	890㎥/h	20~80 ℓ/min	44	282	152

Dimension

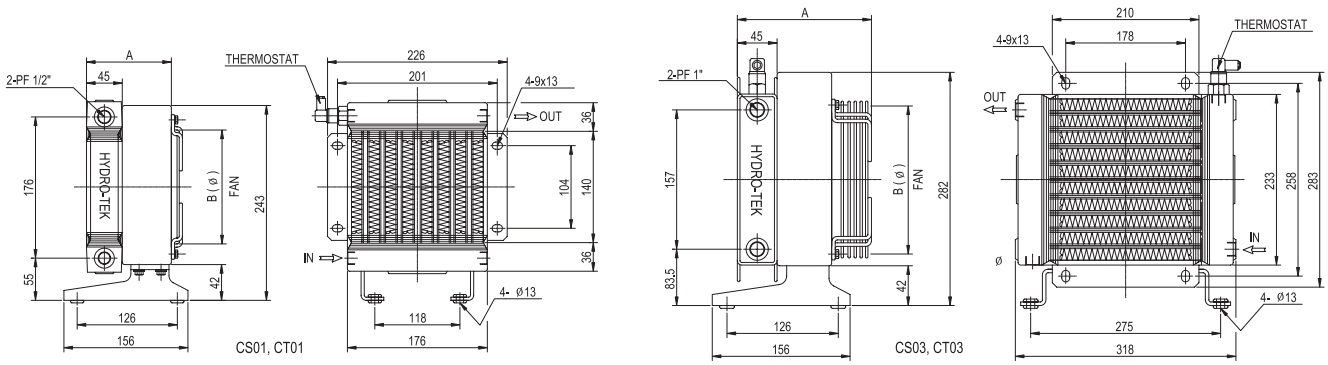

14 A / B (Hydraulic Accessories) Pressure gauge

A	Code	Pressure gauge P

B	Code	01	03
	Pressure (Max.)	250 bar	250 bar
	A (mm)	63	100
	B (mm)	12	20
	C (mm)	55	87
	D (mm)	30	56
	E (mm)	1/4	1/2

Dimension

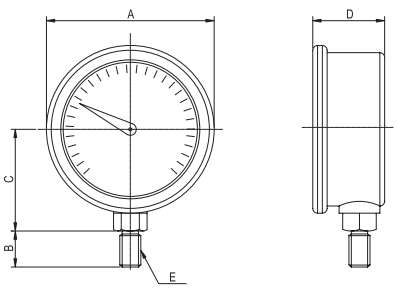

● *Hydro-Tek Europe*
Company name : Slanzi Oleodinamica Srl
Address : Via Provinciale Nord, 221
42017 Novellara (RE)
ITALY
TEL : +39-0522-651313 FAX : +39-0522-758087
Mobile : +39-346-8661233
Contact point : Mr. Michel Zwankhuizen
E-mail : mzwankhuizen@slanzi.it

● *Hydro-Tek China*
Company name : Shanghai HydraPower Co., Ltd.
Address : Room 7-10, 6th Building, No. 3799, Baoan Rd.
Shanghai, R.O.P.
China
Tel : +86-21-59157179 Fax : +86-21-59159419
Mobile : +86-15901657198
Contact Point : Mr.Sunny Liu
E-mail : Sunny@hydrapower.net

● *Hydro-Tek Malaysia*
Company name : Fluid Energy Sdn Bhd
Address : 19, Jalan TPP 5/11, Taman Perindustrian
Puchong, Seksyen 5, 47100 Puchong, Selangor
Darul Ehsan
Malaysia
Tel : +603-8061-9488 Fax : +603-8061-9455
Contact point : Mr. Weli Chan
E-mail : fluid_energy@myjaring.net
fluid@streamyx.com

● *Hydro-Tek Thailand*
Company name : Hydro-Tek Thailand Co.,Ltd
Address : No 48/210-211 Moo 1, Centerplace,
Saphansung, Bangkok 10240
Thailand.
Tel : +66-2-729-5587 Fax : +66-2-3733097
Mobile : +66-87-996-1170
Contact point : Mr. James Lim
E-mail : hydrotek@truemail.co.th

● *Hydro-Tek Japan*
Company name : Trank Co.,Ltd.
Address : 194-3,Kanzaki, Masaki-Cho, IYO-Gun,
Ehime 791-3161
Japan
Tel : +81-89-960-3542 Fax : +81-89-985-1304
Mobile : +81-90-7571-6823
Contact point : Mr. Takeshi Nakamura
E-mail : trank@mtb.biglobe.ne.jp

● *Hydro-Tek India*
Company name : Lockpal Industries
Address : A-6, Sector-3, Noida-201301 (U.P)
India
Tel: +91-120-252-2126 Fax : +91-120-252-7591
Contact point : Mr. Navneet Sawhney
E-mail : info@lokpal.com

● *Hydro-Tek Kingdom of Saudi Arabia*
Company name : Saudi Basic Technology Co., Ltd (SABTECH)
Address : P.O. Box 775, Jeddah 21421, Kingdom of Saudi Aribia
Tel: +966-2-608-0888 Fax : +966-2-608-0512
Contact point : Mr. Ed Sanguenza
E-mail : ed@sabtech.com.sa

● *Hydro-Tek Canada*
Company name : Centre Hydraulique GMB inc.
Address : 310 Metivier #110 Quebec, Qc. G1M 2T7
Canada
Tel : +1 418-681-8793 Toll free : +1 866-681-8793
Fax : +1 418-681-1351
Mobile : +1 418-933-8632
Contact point : Mr. Luc Bourassa
E-mail : administration.gmb@bellnet.ca

● *Hydro-Tek U.S.A*
Company name : Engineered Components Inc.
Address : 546 Old York Road, PO Box 360
Three Bridges, NJ 08887-0360
U.S.A
Tel : +1 800-847-8393 Fax : +1 908-788-8742
Mobile : +1 908-334-8334
Contact Point : Mr. John M. Liggett
E-mail : john@engrcomp.com

Distributed by :

Hydro-Tek Co.,Ltd.

Head office
Address : 443-9, Seokgyo-Ri, Mado-Myun, Hwasung-Shi, Kyunggi-Do, South Korea (445-861)
TEL : +82 31 355 1856~1860 FAX : +82 31 355 1861
Contact point : Mr. H.J Lee
Mobile : +82 10 3639 2223
Web site : www.hydro-tek.com
E-mail : sales@hydro-tek.com purchase@hydro-tek.com

하이드로텍(주)

본사 : 경기도 화성시 마도면 석교리 443-9 (우:445-861)
TEL : 031) 355-1856~60 FAX : 031) 355-1861
Web site : www.hydro-tek.com
E-mail : sales@hydro-tek.com purchase@hydro-tek.com

서울사무소 : 서울시 금천구 가산동 664번지 대륭테크노타운 13차 601, 602호
TEL : 02) 856-3399 FAX : 02) 856-3660

부산사무소 : 부산시 강서구 신호동 207-4번지
TEL : 051) 831-9570 FAX : 051) 831-7880

대구사무소 : 경북 고령군 다산면 송곡리 1755번지 한국인덕터썸
TEL : 054) 954-5682~4 FAX : 054) 954-5685